# DA-1000

Intel® Atom™ or Celeron® Processor
Affordable Fanless Embedded Computer

- Onboard Intel® Atom™ or Celeron® Processors
- One DDR3L SO-DIMM Socket, Support Up to 8G
- Support Dual Display, Output from One DVI-I Port
- Dual Intel® I210 GbE LAN Ports, Support WoL, Teaming, PXE
- Ultra Compact Size (150x105x56.02mm)
- Support -25˚C~70˚C Extended Operating Temperature
- Support 9~48VDC Input, Support AT/ATX Power Mode
- CMI (Combined Multiple I/O) Interface for I/O Module Expandability
- Various Mounting Options (VESA, DIN-Rail, Side/Wall Mounting)

CMI TECHNOLOGY

## Overview

DA-1000 Series is an ultra-compact size fanless embedded computer powered by Intel® Atom™ or Celeron® Processors; it integrated HD graphics processor supporting dual display. This can bring economic advantages on budget and also fulfill the needs for industrial computing tasks. DA-1000 Series manages to pack a diverse array of I/O into its small form factor, with one DVI-I port, two RS-232/422/485 COM ports, dual Gbe LAN ports, four USB ports and one set of Mic-in and Line-out.
DA-1000 Series supports Combined Multiple I/O (CMI) interface and modules which are especially designed for flexible I/O expandability; it allows users to extend various I/Os according to their needs. CMI modules are including COMs, DIO, DisplayPort, DVI, LPT/PS2 or VGA. The rugged construction, wide operating temperature and high tolerance for shock and vibration enables DA-1000 Series to deploy in a harsh environment and for critical applications, and it is totally maintenance-free.

## Highlights

### Ultra Compact

- Palm-size volume in only 150 x 105 x 56.02 mm
- All in one system with comprehensive I/O Interfaces and flexible expansions

### Highly Modularized

- CMI interface and modules offers the possibilities to extend I/O in a small footprint construction
- MEC Modules and dedicated I/O brackets are available

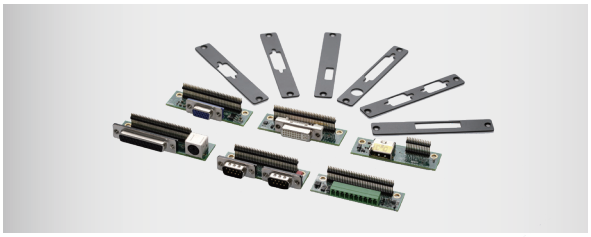

### Rugged & Reliable

- Wide temperature range (-25˚C~70˚C) for operating in harsh environment
- Shock (50 Grms) and vibration (5 Grms) resistance
- OCP, OVP and ESD protections

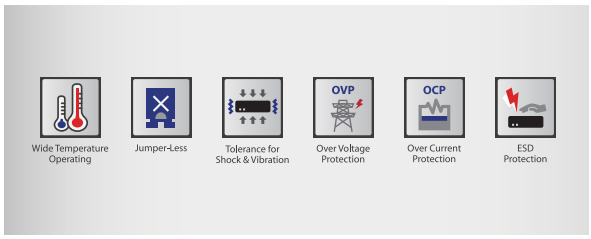

## Specifications

### Processor
- Intel® Atom™ Processor E3826 (1M Cache, Up to 1.46 GHz SoC, 7W TDP)
- Intel® Atom™ Processor E3845 (2M Cache, Up to 1.91 GHz SoC, 10W TDP)
- Intel® Celeron® Processor J1900 (2M Cache, Up to 2.42 GHz SoC, 10W TDP)

### BIOS
- AMI 64 Mbit SPI BIOS

### Memory
- 1x DDR3L 204-pin SO-DIMM, support up to 8GB (1066/1333MHz, un-buffered and non-ECC type)

### Graphics
- Integrated Intel® HD Graphics
- Two Independent Display

### Audio
- Realtek® ALC888S
- High Definition Audio

### I/O Interface
- 1x DVI-I Connector, Up to 1920 x 1080
- 2x GbE LAN Ports (Support Wake On Lan, Teaming, Jumbo Frame, PXE), RJ45
  - -GbE1: Intel® I210-IT
  - -GbE2: Intel® I210-IT
- 2x RS-232/422/485 with Auto Flow Control, DB9
- 1x USB 3.0 & 3x USB 2.0 (Type-A)
- 1x Mic-in and 1x Line-out, Phone Jack 3.5mm
- 1x ATX Power On/Off Switch Button
- 1x AT/ATX Mode Switch
- 1x Remote Power On/Off Connector, 2-Pin Terminal Block

### Storage
- 1x mSATA (SATA 2.0, Shared by Mini-PCIe Socket)
- 1x 2.5" SATA HDD Bay (Optional 1x Half-Slim SSD, SATA 2.0)

### Expansion
- 1x CMI Interface for CMI Modules
- 2x Full-size Mini-PCIe (Supports Wireless & I/O Expansion)
- 1x SIM Socket
- 1x Universal I/O Bracket
- 2x Antenna Holes

### Other Function
- Instant Reboot Technology (0.2 sec)
- Watchdog Timer:
  Software Programmable Supports 256 Levels System Reset

### Power Requirement
- Support AT/ATX Power Type
- Power Input Voltage 9~48VDC
- 3-Pin Terminal Block Connector
- Optional Power Adapter AC/DC 12V/5A 60W

### Physical
- Dimension (WxDxH): 150 x 105 x 52.3 mm
- Weight: 0.86kg
- Construction: Extruded Aluminum with Heavy Duty Metal
- Mounting: VESA / Wall Mounting
  (Optional DIN-Rail / Side Mounting)
- Unibody Design
- Fanless Design
- Jumper-less Design

### Protection
- Reverse Power Input Protection Supported
- Over Voltage Protection (OVP)
  Protection Range: 51~58V
  Protection Type: shut down operating voltage, re-power on at the preset level to recover
- Over Current Protection (OCP) 120V/ 20A
- ESD Protection Air Discharge: +/-8kV (air), +/-4kV (contact)

### Operating System
- Windows® 10
- Windows® 8.1
- Windows® 7

### Environment
- Operating Temperature: -25°C to 70°C
  (With extended temperature peripherals; Ambient with Air Flow by IEC60068-2-1, IEC60068-2-2, IEC60068-2-14)
- Storage Temperature: -40°C to 85°C
- Relative Humidity: 95% RH @ 40˚C (Non-condensing)
- Shock: 50 Grms
  (With SSD According to IEC 60068-2-27, Half Sine, 11ms Duration)
- Vibration: Random: 5 Grms
  (With SSD According to IEC 60068-2-64, 5~500Hz, 1 hr/axis)

### Certification
- CE
- FCC Class A

## External Layout

Front I/O

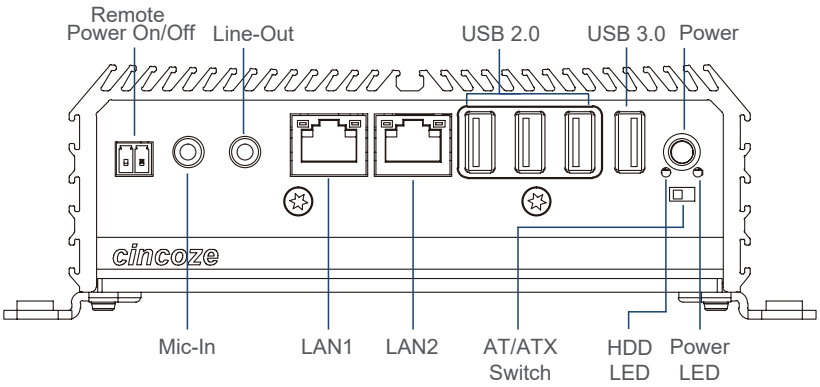


Rear I/O

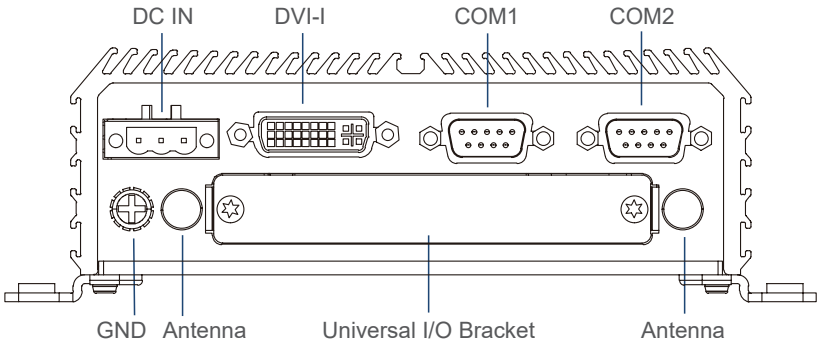


## Dimensions

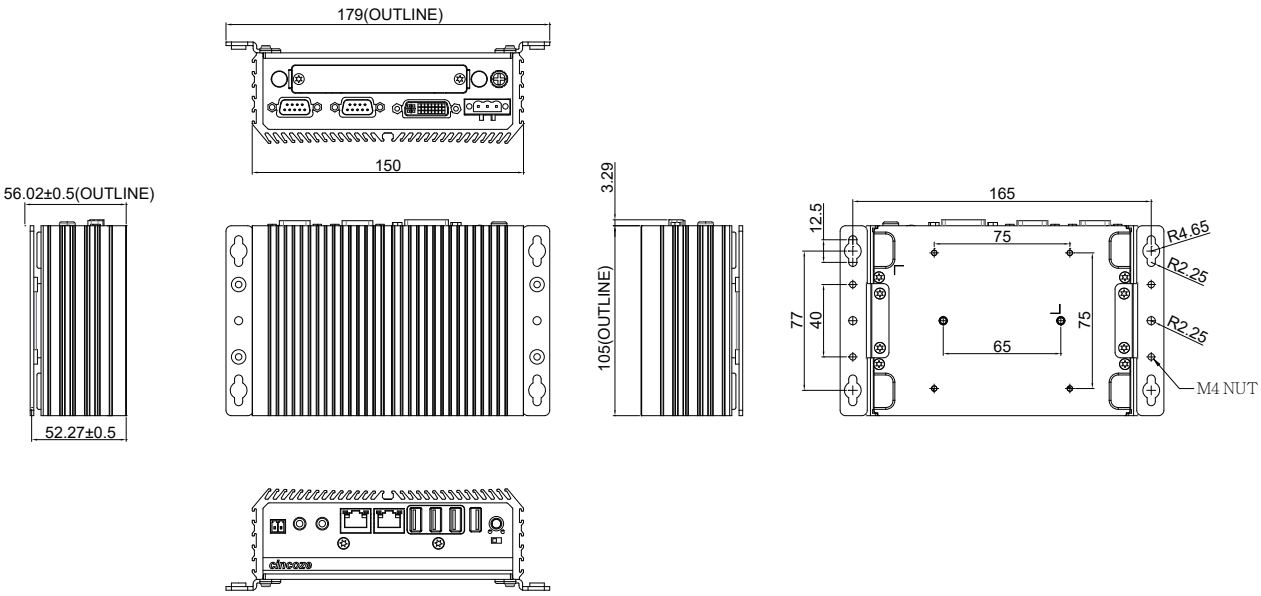


Unit: mm

## Ordering Information

### Available Models

| Model No. | Description |
|---|---|
| DA-1000 | Intel® Atom™ E3826 Affordable Fanless Embedded Computer |
| DA-1000-E45 | Intel® Atom™ E3845 Affordable Fanless Embedded Computer |
| DA-1000-J19 | Intel® Celeron® J1900 Affordable Fanless Embedded Computer |

### Package Checklist

- DA-1000 Embedded System x 1
- Power Terminal Block Connector x 1
- Remote Power On/Off Terminal Block Connector x 1
- Utility DVD Driver x 1
- DVI-I to VGA Adapter x 1
- Screw Pack x 1 (For HDD/Mini-PCIe/Wall & VESA Mounting)
- Wall Mount Kit x 1

### Optional Modules & Accessories

| Model No. | Description |
|---|---|
| CMI-COM102/UB0403 | CMI Module with 2x RS232/422/485, 1x Universal Bracket (96 x 15 mm) |
| CMI-DIO100/UB0415 | CMI Module with 8x Optical Isolated DIO (4 in/4 out), 1x Universal Bracket (96 x 15 mm) |
| CMI-DP101/UB0406 | CMI Module with 1x Display Port, 1x Universal Bracket (96 x 15 mm) |
| CMI-DVI101/UB0407 | CMI Module with 1x DVI-D Connector, 1x Universal Bracket (96 x 15 mm) |
| CMI-LPPS102/UB0409 | CMI Module with 1x LPT Port, 1x PS/2, 1x Universal Bracket (96 x 15 mm) |
| CMI-VGA101/UB0416 | CMI Module with 1x VGA Port, 1x Universal Bracket (96 x 15 mm) |
| CMI-HD01/UB0408 | CMI Module with 1x HDMI Port for DA Series, 1x Universal Bracket with HDMI Cutout for DA Series |
| MEC-LAN-M002-15/UB0411 | Mini-PCIe Module with 2x LAN Ports, 1x Universal Bracket (96 x 15 mm) |
| MEC-USB-M102-15/UB0414 | Mini-PCIe Module with 2x USB 3.0 Ports, 1x Universal Bracket (96 x 15 mm) |
| SIDE-DA | DA series SIDE Mount Kit |
| DINRAIL-R10 | Diamond series DIN-RAIL Mount Kit |
| HBK01 | DA-1000 Half-Slim SSD Bracket with 6x Screws |
| GST60A12-CIN1 | Adapter AC/DC 12V 5A 60W, with 3pin Terminal Block Plug 5.0mm Pitch with Tubes, Level VI |