DX-1000

7/6th Generation Intel® Xeon® and Core™ Processors, Extreme Performance, Compact and Modular Rugged Workstation

- Supports 7/6th Generation Intel® Xeon® / Core™ LGA1151 Socket Type Processors with Intel® C236 Chipset
- 2x DDR4-2133/2400 SO-DIMM Sockets, up to 64GB Memory
- Triple Independent Display (1x DVI-I, 2x DisplayPort)
- 2x 2.5" Hot Swap SATA III HDD/SSD bays, Supports RAID 0/1
- 3x CMI Interfaces for RJ45/M12 GbE LAN, COM & DIO Expansions
- 2x CFM Interfaces for Power Ignition Sensing and PoE Functions
- 4x Full-size Mini-PCIe Slots for Wireless & I/O Expansions
- EN50121-3-2 Certified for Railway Application
- E-Mark (E13, No.10R-0514546) Certification for In-vehicle Application

CMI TECHNOLOGY CFM TECHNOLOGY MEC TECHNOLOGY

Overview

The Cincoze DX-1000 is a rugged workstation series based on LGA 1151 socket and Intel® C236 chipset supporting 7th/6th generation Intel® Xeon® and Intel® Core™ Processors, DX-1000 Series supports 4K resolution through Intel® Gen9 graphics engine with two DDR4 SO-DIMM sockets up to 64GB memory which delivers outstanding computing performance for high-end applications.

Despite remarkably compact footprint and rich I/O including 1x DVI-I, 2x Display ports, 2x GbE LAN ports, 4x RS232/422/485 serial ports and 8x USB 3.0 ports, Cincoze provides its exclusive CMI (Combined Multiple I/O) and CFM (Control Function Module) technologies to make DX-1000 Series a highly scalable system for specific applications such as Industrial automation, transportation, machine vision, in-vehicle and mobile surveillance. DX-1000 Series can be expanded with powered serial port, optical isolated digital I/O, multiple GbE LAN, M12 connector, Power over Ethernet and power ignition sensing function through versatile modules.

Featuring wide operating temperature (-40~+70°C), wide range DC power input (9~48 VDC), high tolerance to vibration and shock (5/50 Grms), rugged uni-body construction, fanless, cable-less and jumper-less design, the DX-1000 Series is ideal to be deployed in harsh environments.

Highlights

High Performance

Supports Intel® Xeon®/Core™ i7/i5/i3 processors, DX Series is specially designed to delivering workstation grade performance for multi-task applications

Compact Size

Small footprint (3.2 liter) with rich I/O for greater connectivity, 2x front accessible HDD/SDD trays for ease of data maintenance

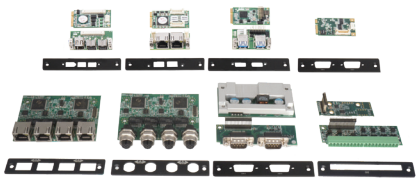

Wide Temperature

Unique CMI, CFM and MEC technologies for modular expansion to satisfy diversified applications

Specifications

Processor
- 7th Generation Intel® CPU (Kaby Lake-S)
  - Intel® Core i3-7101TE: 3M Cache, 3.4 GHz, TDP 35W
  - Intel® Core i5-7500T: 6M Cache, up to 3.3 GHz, TDP 35W
  - Intel® Core i7-7700T: 8M Cache, up to 3.8 GHz, TDP 35W
  - Intel® Core i5-7500: 6M Cache, up to 3.8 GHz, TDP 65W
  - Intel® Core i7-7700: 8M Cache, up to 4.2 GHz, TDP 65W
  - Intel® Xeon E3-1275 v6: 8M Cache, up to 4.2 GHz, TDP 73W
- 6th Generation Intel® CPU (Skylake-S)
  - Intel® Core i3-6100TE: 4M Cache, 2.7 GHz, TDP 35W
  - Intel® Core i5-6500TE: 6M Cache, up to 3.3 GHz, TDP 35W
  - Intel® Core i7-6700TE: 8M Cache, up to 3.4 GHz, TDP 35W
  - Intel® Xeon E3-1268L v5: 8M Cache, up to 3.4 GHz, TDP 35W
  - Intel® Core i3-6100: 3M Cache, 3.7 GHz, TDP 51W
  - Intel® Core i5-6500: 6M Cache, up to 3.6 GHz, TDP 65W
  - Intel® Core i7-6700: 8M Cache, up to 4.0 GHz, TDP 65W
  - Intel® Xeon E3-1225 v5: 8M Cache, up to 3.7 GHz, TDP 80W
  - Intel® Xeon E3-1275 v5: 8M Cache, up to 4.0 GHz, TDP 80W

Chipset
Intel® C236

BIOS
AMI 16MB BIOS

Memory
- 2x DDR4-2133/2400MHz SO-DIMM Sockets, Support up to 64 GB (Un-buffered and Non-ECC type)

Graphics
- Integrated Intel® HD Graphics supports triple independent display (1x DVI-I, 2x DisplayPort)

Audio
- Realtek® ALC888
- High Definition Audio

I/O Interface
- 1x DVI-I Connector (1920 x 1080 @60Hz)
- 2x DisplayPort Connectors (3840 x 2160 @30Hz)
- 2x GbE LAN (Support WoL, Teaming, Jumbo Frame, IEEE 1588v2 and PXE), RJ45
  - GbE1: Intel® I219-LM
  - GbE2: Intel® I210-IT
- 4x RS-232/422/485 with Auto Flow Control (Support 5V/12V), DB9
- 8x USB 3.0 (Type-A)
- 1x Line-out & 1x Mic-in, Phone Jack 3.5mm
- 1x ATX Power On/Off Button
- 1x Reset Button
- 1x AT/ATX Mode Switch
- 1x Clear CMOS Swit ch
- 1x Remote Power On/Off Connector, 2-pin Terminal Block
- 1x External FAN Connector, 4-pin Terminal Block (supports smart fan by BIOS)

Storage
- 2x SATA III (6Gbps) for 2.5" HDD/SSD
- 4x mSATA (Shared by Mini-PCIe Socket) (Gen3)
- Supports S/W RAID 0, 1, 5 & 10

Expansion
- Supports CFM (Control Function Module) Technology
  - CFM IGN Module, CFM PoE Module
- Supports CMI (Combined Multiple I/O) Technology
  - 4x RJ45 GbE LAN Module, 4x M12 GbE LAN Module (via 2x High Speed CMI Interfaces)
  - 2x COM Module, 16x Optical Isolated DIO Module (via 1x Low Speed CMI Interface)
- 4x Full-size Mini-PCIe Sockets
- 1x SIM Socket

Other Function
- Supports Instant Reboot Technology (0.2 sec)
- SuperCap Integrated for CMOS Battery-free Operation
- Watchdog Timer: Software Programmable Supports 256 Levels System Reset

Power Requirement
- Supports AT/ATX Power Type
- Power Input Voltage 9~48VDC
- 3-pin Terminal Block
- Power Adapter AC/DC 24V/5A 120W or 24V/9.2A 220W (Optional)

Physical
- Dimension (WxDxH): 242 x 174 x 77 mm
- Weight: 3.6 kg
- Extruded Aluminum with Heavy Duty Metal
- Wall mount / VESA mount / DIN Rail Mount / Side Mount
- Unibody Chassis
- Fanless Design
- Jumper-less Design
- Cable less Design

Protection
- Reverse Power Input Protection
- Over Voltage Protection: Protection Range: 51~58V
  Protection Type: shut down operating voltage, re-power on at the preset level to recover
- Over Current Protection: 15A
- ESD Protection: +/-8kV (air), +/-4kV (contact)
- Surge Protection: 3.84 kV (impedance 12 ohm 1.2/50us waveform)

Operating System
- 7th Generation Intel® CPU (Kaby Lake-S): Windows® 10
- 6th Generation Intel® CPU (Skylake-S): Windows® 10/ 8.1/ 7
- Linux: Supports by project

Environment
- Operating Temperature:
  7th Generation Intel® CPU (Kaby Lake-S)
  - 35W TDP CPU: -40°C to 50°C
  - 51W~65W TDP CPU: -40°C to 45°C
  - 73W TDP CPU: -40°C to 40°C
  6th Generation Intel® CPU (Skylake-S)
  - 35W TDP CPU: -40°C to 70°C
  - 51W~65W TDP CPU: -40°C to 55°C
  - 80W TDP CPU: -40°C to 40°C
  (With Extended Temperature Peripherals; Ambient with Air Flow; According to IEC60068-2-1, IEC60068-2-2, IEC60068-2-14)
- Storage Temperature: -40°C to 85°C
- Relative Humidity: 40°C @ 95% RH (non-Condensing)
- Shock: Operating, 50 Grms, Half-sine 11 ms Duration (w/ SSD, according to IEC60068-2-27)
- Vibration: Operating, 5 Grms, 5-500 Hz, 3 Axes (w/ SSD, according to IEC60068-2-64)
- EMC: CE, FCC Class A, EN50121-3-2, E-Mark (E13, No.10R-0514546)
- Safety: LVD (EN60950-1)
- Fire Protection: EN45545-2
- MTBF: 457,941 Hours
  Database: Telcordia SR-332 Issue 3, Method 1, Case 3

External Layout

Front I/O

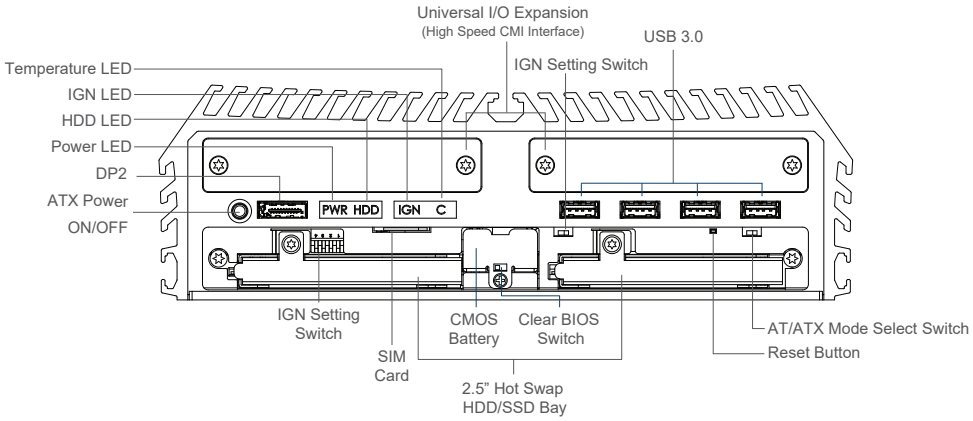

Rear I/O

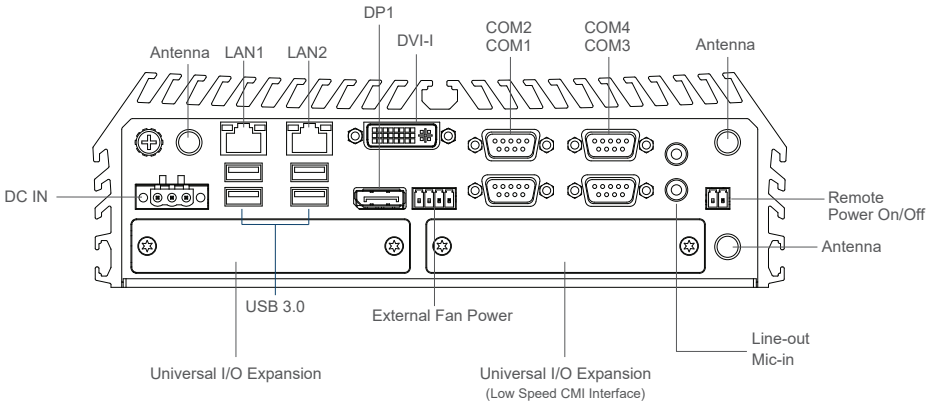

Dimensions

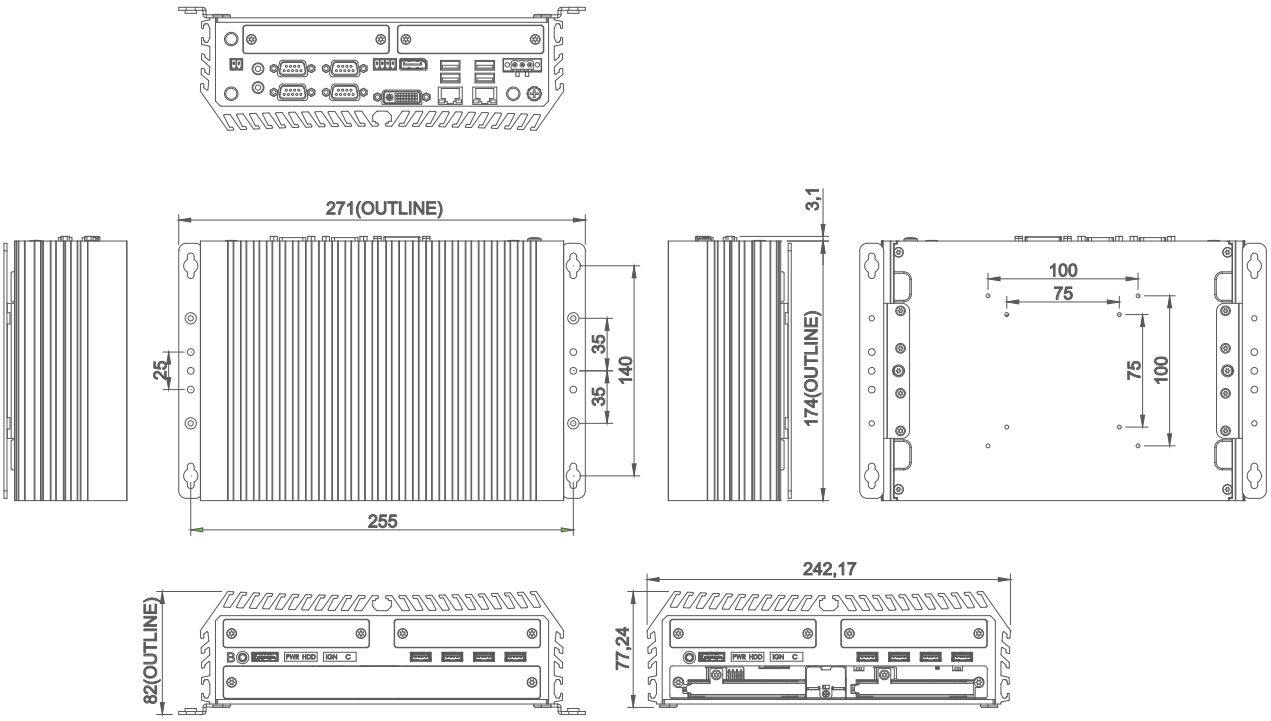

Unit: mm

Ordering Information

Available Models

Model No.	Description
DX-1000-R10	7/6th Generation Intel® Xeon® and Core™ Processors, Extreme Performance, Compact and Modular Rugged Workstation

Package Checklist

- DX-1000 Rugged Workstation x1
- CPU Heatsink Thermal Pad x1
- Utility DVD Driver x1
- Screw Pack x1
- Wall Mounting Kit x1
- Power Terminal Block Connector x1
- Remote Power On/Off Terminal Block Connector x1
- Fan Terminal Block Connector x1
- DVI-I to VGA Adaptor x1

Optional Modules & Accessories

Model No.	Description
CFM-IGN01	CFM Module with Power Ignition Sensing Control Function, Select 12V/24V
CFM-PoE01	CFM Module with PoE Control Function, Individual Port 25.5W
CMI-LAN01-R12/UB0912	CMI Module with 4x RJ45 Ports, Intel® I210-IT GbE LAN / 1x Universal Bracket [97 x 18 mm]
CMI-M12LAN01-R12/UB0910	CMI Module with 4x M12 A Coded Connectors, Intel® I210-IT GbE LAN / 1x Universal Bracket [97 x 18 mm]
CMI-DIO01/UB0918	CMI Module with 16x Optical Isolated DIO (8 in/8 out) / 1x Universal Bracket [97 x 18 mm]
CMI-COM01/UB0903	CMI Module with 2x RS232/422/485 / 1x Universal Bracket [97 x 18 mm]
MEC-COM-M212-TDB9/UB0903	Mini-PCIe Module with 2x COM Ports / 1x Universal Bracket [97 x 18 mm]
MEC-COM-M334-TDB9/2xUB0903	Mini-PCIe Module with 4x COM Ports / 2x Universal Brackets [97 x 18 mm]
MEC-USB-M102-15/UB0914	Mini-PCIe Module with 2x USB 3.0 Ports / 1x Universal Bracket [97 x 18 mm], 1x Cable for MEC-USB (15cm)
MEC-LAN-M002-30/UB0911	Mini-PCIe Module with 2x LAN Ports / 1x Universal Bracket [97 x 18 mm]
FAN-EX101	External Fan with 4pin Terminal Block Plug, Mounting Bracket, Support smart fan
GS120A24-CIN	Adapter AC/DC 24V 5.0A 120W with 3pin Terminal Block Plug 5.0mm Pitch, with Tubes, Level VI
GS220A24-CIN	Adapter AC/DC 24V 9.2A 220W with 3pin Terminal Block Plug 5.0mm Pitch, with Tubes, Level VI
Side-DX	DX Series Side Mount Kit
DIN01	Dinrail Mount Kit, KMRH-K175

Optional Module Configuration

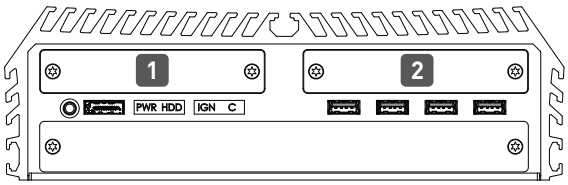

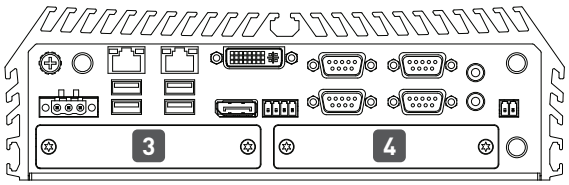

Model No.	Description	1	2	3	4
CMI-LAN01-R12/UB0912	CMI Module with 4x RJ45 Ports, Intel® I210-IT GbE LAN / 1x Universal Bracket [97 x 18 mm]	V	V	-	-
CMI-M12LAN01-R12/UB0910	CMI Module with 4x M12 A Coded Connectors, Intel® I210-IT GbE LAN / 1x Universal Bracket [97 x 18 mm]	V	V	-	-
CMI-LAN01-R12/UB0912/ CFM-PoE01	CMI Module with 4x RJ45 Ports, Intel® I210-IT GbE LAN / 1x Universal Bracket [97 x 18 mm] / CFM Module with PoE Control Function, Individual Port 25.5W	V	V	-	-
CMI-M12LAN01-R12/UB0910/ CFM-PoE01	CMI Module with 4x M12 A Coded Connectors, Intel® I210-IT GbE LAN / 1x Universal Bracket [97 x 18 mm] / CFM Module with PoE Control Function, Individual Port 25.5W	V	V	-	-
CMI-DIO01/UB0918	CMI Module with 16x Optical Isolated DIO (8 in/8 out) / 1x Universal Bracket [97 x 18 mm]	-	-	-	V
CMI-COM01/UB0903	CMI Module with 2x RS232/422/485 / 1x Universal Bracket [97 x 18 mm]	-	-	-	V
MEC-COM-M212-TDB9/UB0903	Mini-PCIe Module with 2x COM Ports / 1x Universal Bracket [97 x 18 mm]	V	V	V	V
MEC-COM-M334-TDB9/ 2xUB0903	Mini-PCIe Module with 4x COM Ports / 2x Universal Brackets [97 x 18 mm]	V	V	V	V
MEC-USB-M102-15/UB0914	Mini-PCIe Module with 2x USB 3.0 Ports / 1x Universal Bracket [97 x 18 mm], 1x Cable for MEC-USB (15cm)	-	V	-	-
MEC-LAN-M002-30/UB0911	Mini-PCIe Module with 2x LAN Ports / 1x Universal Bracket [97 x 18 mm]	V	V	V	-

V : Compatible

© Cincoze Co., Ltd. All Rights Reserved. Specifications subject to change without notice.
All product names, logos, and brands are the property of their respective owners. All company, product and service names used in this document are for identification purposes only. The use of these names, logos, and brands does not imply endorsement.