# DS-1102

7/6th Generation Intel Core Series Processors, High Performance, Expandable and Modular Rugged Embedded Computer with 2x PCI/PCIe Expansion Slot

- Supports 7/6th-Gen Intel® Core™ i3 / i5 / i7 Socket-type CPU (LGA1151)
- 2x DDR4 SO-DIMM Socket, 2,133 / 2,400 MHz, Supports Up to 64 GB
- Triple Independent Display (1x DVI-I, 2x DP)
- 2x 2.5" SATA HDD/SSD bay (Gen3), Supports RAID 0/1
- 2x PCI/PCIe Slots with Different Combination of Interfaces
- 2x CMI Interfaces with 6 Types of Optional Modules for I/O Expansion
- 1x CFM Interface for Adding Optional Power Ignition Sensing (IGN) Module
- Supports 3x Full-size Mini-PCIe Slot for Wireless & I/O Expansion
- Wide Operating Temperature (-40°C to 70°C)
- EN50121-3-2 Certified for Railway Application
- E-Mark (E13, No.10R-0514229) Certified

## Overview

Cincoze DS-1100 Series is a high-performance fanless embedded computer powered by 7/6th generation Intel® Core™ platform supporting a wide range of desktop CPUs (socket-type, LGA1151), and accommodates two DDR4 sockets up to 64 GB which allows DS-1100 Series to fulfill all kinds of high-end computing requirements. DS-1100 Series provides powerful functionalities such as rich I/Os, Power over Serial, Electrical Isolated Serial Ports, Optical Isolated Digital I/O, multiple LAN, Power over Ethernet, M12 connectors, RAID 0/1, Power Ignition Sensing and Instant Reboot. Thanks to Cincoze's CMI & CFM Technology, it allows you to configure DS-1100 Series according to your specific needs with ready-to-use modules. DS-1100 Series also supports maximum 2 PCI/PCIe expansion slots with different combination of interfaces for expanding all kinds of application add-on cards. DS-1100 Series is truly a rugged computing system with features of wide operating temperature (-40°C to 70°C), wide range DC power input (from 9V to 48V), high tolerance of shock and vibration, high-standard industrial protections and the integrated SuperCap for battery maintenance-free operation. DS-1100 Series is suitable to deploy in a harsh environment and for critical applications, and it is totally maintenance-free.

## Highlights

**High Performance**

- Supports Intel® 7/6th Generation Processors (65W/35W)
- Performance Enhanced by Intel® 14 nm Technology
- Intel® HD Graphics Supports Triple Independent Display Resolution Up to 4K
- Intel® Q170 Chipset Brings More High-speed I/Os

**Powerful Functionalities**

- Rich I/Os
- Power over Serial
- Electrical Isolated Serial Port
- Optical Isolated Digital I/O
- Power Ignition Sensing
- Multiple LAN
- Power over Ethernet
- RAID 0/1
- Instant Reboot
- M12 Connectors

**Fully Modular and Expandable**

- CMI (Combined Multiple I/O) Technology for I/O Expansion
- CFM (Control Function Module) Technology for Adding Power Ignition Sensing Function
- Mini-PCIe Modules and Dedicated I/O Brackets Available
- PCI/PCIe Slot with Different Combination of Interfaces

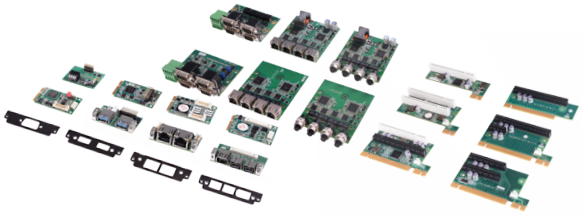

## Specifications

### Processor
- 7th Generation Intel® CPU (Kaby Lake-S)
  - Intel® Core™ i7-7700T Processor (8M Cache, up to 3.8 GHz, 35W TDP)
  - Intel® Core™ i5-7500T Processor (6M Cache, up to 3.30 GHz, 35W TDP)
  - Intel® Core™ i3-7101TE Processor (3M Cache, 3.40 GHz, 35W TDP)
  - Intel® Celeron® G3930TE Processor (2M Cache, 2.70 GHz, 35W TDP)
  - Intel® Core™ i7-7700 Processor (8M Cache, up to 4.20 GHz, 65W TDP)
  - Intel® Core™ i5-7500 Processor (6M Cache, up to 3.80 GHz, 65W TDP)
  - Intel® Celeron® G3930E Processor (2M Cache, 2.90 GHz, 54W TDP)
- 6th Generation Intel® CPU (Skylake-S)
  - Intel® Core™ i7-6700TE Processor (8M Cache, up to 3.40 GHz, 35W TDP)
  - Intel® Core™ i5-6500TE Processor (6M Cache, up to 3.30 GHz, 35W TDP)
  - Intel® Core™ i3-6100TE Processor (4M Cache, 2.70 GHz, 35W TDP)
  - Intel® Pentium® Processor G4400TE (3M Cache, 2.40 GHz, 35W TDP)
  - Intel® Celeron® Processor G3900TE (2M Cache, 2.30 GHz, 35W TDP)
  - Intel® Core™ i7-6700 Processor (8M Cache, up to 4.00 GHz, 65W TDP)
  - Intel® Core™ i5-6500 Processor (6M Cache, up to 3.60 GHz, 65W TDP)
  - Intel® Core™ i3-6100 Processor (3M Cache, 3.70 GHz, 51W TDP)
  - Intel® Pentium® Processor G4400 (3M Cache, 3.30 GHz, 54W TDP)
  - Intel® Celeron® Processor G3900 (2M Cache, 2.80 GHz, 51W TDP)

### Chipset
Intel® Q170

### BIOS
AMI 16Mbit SPI BIOS

### Memory
- 2x DDR4 260-pin SO-DIMM socket, support up to 64 GB (2133/2400 MHz, un-buffered and non-ECC type)

### Graphics
- Intel® HD Graphics supports triple independent display (1x DVI-I, 2x DisplayPort)

### Audio
- Realtek® ALC888-GR
- High Definition Audio

### I/O Interface
- 1x DVI-I Connector, Resolution 1920 x 1080
- 2x DisplayPort Connector, Resolution 3840 x 2160
- 2x GbE LAN (Support WoL, Teaming, Jumbo Frame and PXE), RJ45
  - GbE1: Intel I219-LM
  - GbE2: Intel I210-IT
- 2x RS-232/422/485 with Auto Flow Control Support 5V/12V, DB9
- 6x USB 3.0, Type-A
- 2x USB 2.0, Type-A
- 1x Line-out & 1x Mic-in, Phone Jack 3.5mm
- 1x ATX Power On/Off Switch
- 1x AT/ATX Mode Switch
- 1x Clear CMOS Switch
- 1x Remote Power On/Off Connector, 2-Pin Terminal Block
- 1x Remote Reset Connector, 2-Pin Terminal Block
- 1x External FAN Connector, 4-Pin Terminal Block

### Storage
- 2x 2.5" SATA HDD/SSD Bay, Support RAID 0/1 (Gen3)
- 3x mSATA (shared by Mini-PCIe socket) (Gen3)

### Power Requirement
- Support AT/ATX Power Type
- Power Input Voltage 9~48VDC
- One 3-Pin Terminal Block Connector
- Power Adapter AC/DC 24V/5A 120W or 24V/9.2A 220W (Optional)

### Expansion
- Supports CFM (Control Function Module) Technology
  - CFM IGN Module
- Supports CMI (Combined Multiple I/O) Technology
  - 4x RJ45 GbE LAN Module
  - 4x M12 GbE LAN Module
  - 4x RJ45 GbE PoE+ Module
  - 4x M12 GbE PoE+ Module
  - 4x RS-232/422/485 + 8x Optical Isolated DIO Module
  - 4x Isolated RS-232/422/485 + 8x Optical Isolated DIO Module
- 2x PCI/PCIe Expansion slots

  Optional Riser Card: ▪ 1x PCIex16+1x PCIex1 ▪ 2x PCIex8
  ▪ 1x PCIex16+1x PCIx1 ▪ 2x PCI

  Support maximum dimension of add-on card (H x L):111.15mm x 235mm
- 3x Full-size Mini-PCIe Sockets
- 1x SIM Socket

### Other Function
- Support Instant Reboot Technology (0.2 sec)
- SuperCap Integrated for CMOS Battery Maintenance-free Operation
- Watchdog Timer: Software Programmable Supports 256 Levels System Reset
- Power Ignition Sensing (IGN) Function (with Optional CFM module) 12V/24V Selectable

### Physical
- Dimension (WxDxH): 227 x 261 x 128 mm
- Weight: 5.7 kg
- Extruded Aluminum with Heavy Duty Metal
- Support Wall Mounting
- Unibody Chassis
- Fanless Design
- Jumper-less Design

### Protection
- Reverse Power Input Protection
- Over Voltage Protection: Protection Range: 51~58V
  Protection Type: shut down operating voltage, re-power on at the preset level to recover
- Over Current Protection: 15A
- ESD Protection: +/-8kV (air), +/-4kV (contact)
- Surge Protection: 3.84 kV (impedance 12 ohm 1.2/50us waveform)

### Operating System
- 7th Generation Intel® CPU (Kaby Lake-S): Windows® 10
- 6th Generation Intel® CPU (Skylake-S): Windows® 10/ 8.1/ 7
- Linux : Supports by project

### Environment
- Operating Temperature:

  7th Generation Intel® CPU (Kaby Lake-S)
  - 35W TDP CPU: -40°C to 50°C
  - 51W~65W TDP CPU: -40°C to 45°C

  6th Generation Intel® CPU (Skylake-S)
  - 35W TDP CPU: -40°C to 70°C
  - 51~65W TDP CPU: -40°C to 50°C

  (With extended temperature peripherals; Ambient with air flow; According to IEC60068-2-1, IEC60068-2-2, IEC60068-2-14)
- Storage Temperature: -40°C to 85°C
- Relative Humidity: 70°C @ 95% RH (Non-condensing)
- EMC: CE, FCC Class A, EN50121-3-2, E-Mark (E13, No.10R-0514229)

## External Layout

### Front I/O

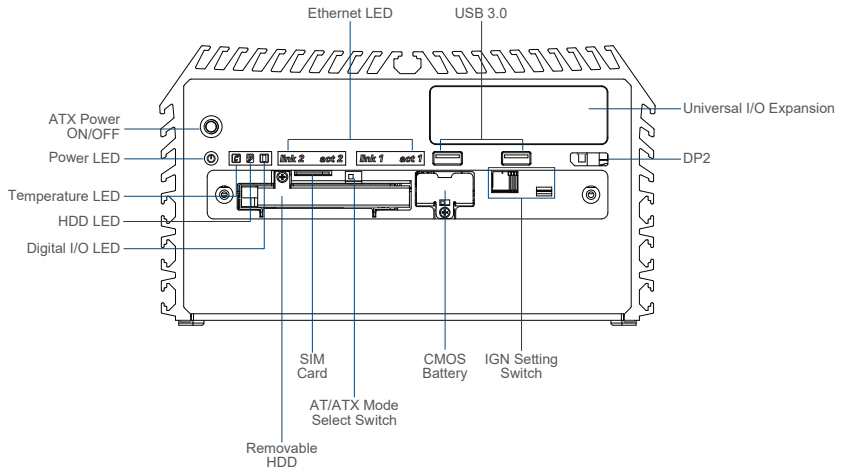


### Rear I/O

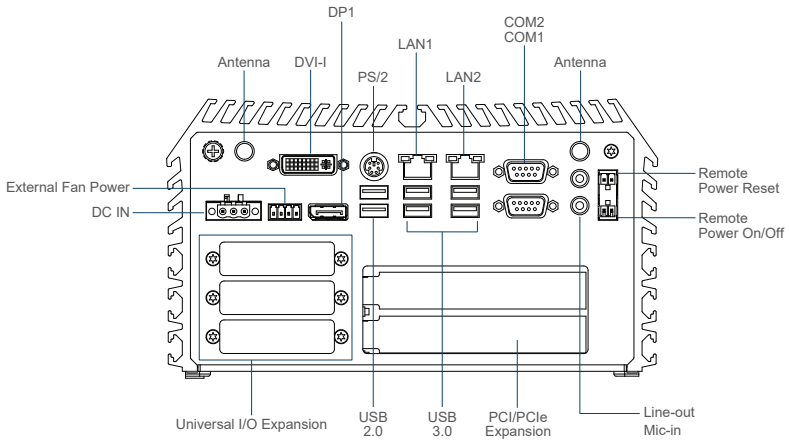


## Dimensions

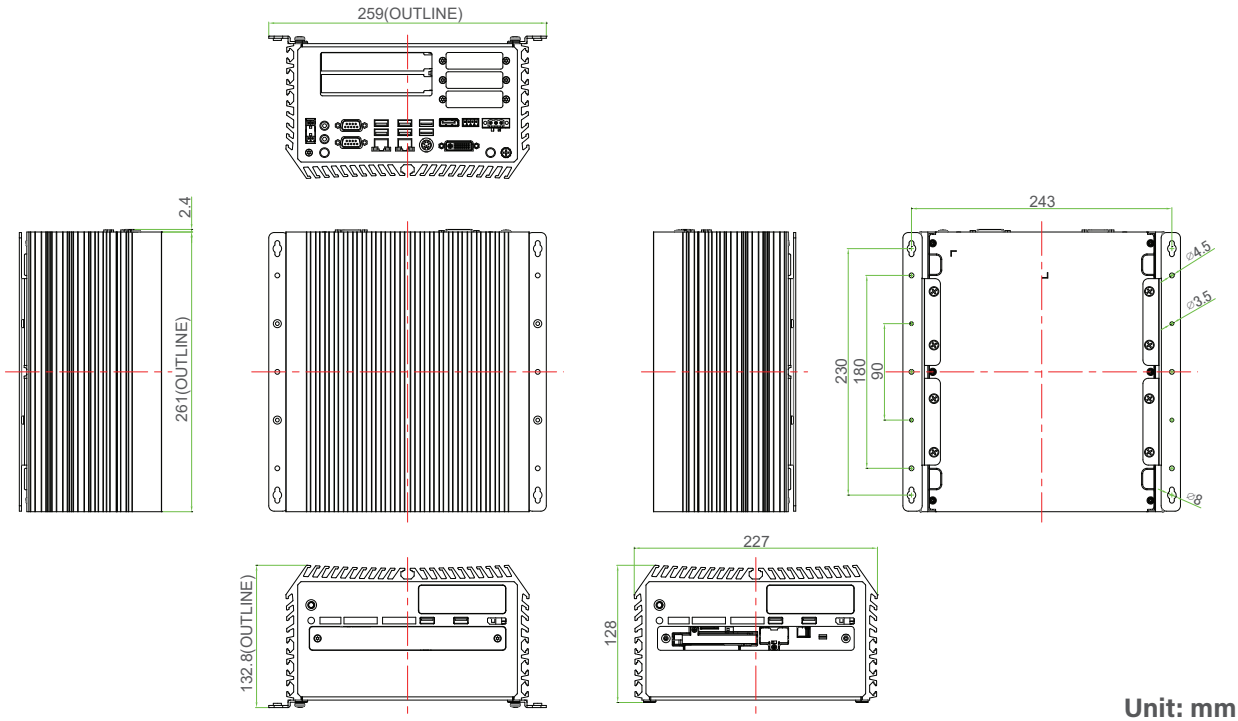


Unit: mm

# Ordering Information

## Available Models

| Model No. | Description |
|---|---|
| DS-1102-R20 | 7/6th Generation Intel Core Series Processors, High Performance, Expandable and Modular Rugged Embedded Computer with 2x PCI/PCIe Expansion Slot |

## Package Checklist

- DS-1102 Embedded System x 1
- Utility DVD Driver x 1
- Heat Sink Pack x 1
- Screw Pack x 1
- Wall Mounting Kit x1
- Power Terminal Block Connector x 1
- Remote Power On/Off Terminal Block Connector x 2
- Fan Terminal Block Connector x 1
- DVI-I to VGA Adaptor

## Optional Modules & Accessories

| Model No. | Description |
|---|---|
| CFM-IGN101 | CFM Module with Power Ignition Sensing Control Function, Selectable 12V/24V (43 x 36 mm) |
| CMI-CD100/FB22 | CMI Module with 4x RS-232/422/485 Serial Ports, 8x Optical Isolated DIO (4 in/4 out), 1x DS-1102 Front Bezel |
| CMI-ICD100/FB22 | CMI Module with 4x Electrical Isolated RS-232/422/485 Serial Ports, 8x Optical Isolated DIO (4 in/4 out), 1x DS-1102 Front Bezel |
| CMI-LAN104/UB0612 | CMI Module with 4x Intel GbE LAN, RJ45 Port, 1x Universal Bracket with 4x RJ45 Cutout for DS-1100 Series |
| CMI-PoE104/UB0612 | CMI Module with 4x PoE+, Intel GbE LAN, RJ45 Port, Individual Port 25.5W, 1x Universal Bracket with 4x RJ45 Cutout for DS-1100 Series |
| CMI-M12LAN104/UB0610 | CMI Module with M12 Connector, 4x Intel GbE LAN, 1x Universal Bracket with 4x M12 Cutout for DS-1100 Series |
| CMI-M12PoE104/UB0610 | CMI Module with M12 Connector, 4x PoE+, Intel GbE LAN, Individual Port 25.5W, 1x Universal Bracket with 4x M12 Cutout for DS-1100 Series |
| FAN-EX101 | External Fan with 4pin Terminal Block Plug, Mounting Bracket, Support smart fan |
| FAN-UB100 | Exhaling Fan with 4pin Connector, Universal Bracket |
| FAN-UB101 | Inhaling Fan with 4pin Connector, Universal Bracket |
| MEC-LAN-M002-30/UB0311 | Mini-PCIe Module with 2x LAN Ports, 2x 30cm cable, 1x Universal Bracket with 2x RJ45 Cutout for DS / P1000 Series |
| MEC-USB-M102-30/UB0314 | Mini-PCIe Module with 2x USB 3.0 Ports, 1x 30cm cable, 1xUniversal Bracket with 2x USB Cutout for DS / P1000 Series |
| MEC-COM-M212-DB9/UB0303 | Mini-PCIe Module with 2x COM Ports, 1x Standard DB9 Cable, 2x Universal Bracket each with 1x DB9 Cutout for DS / P1000 Series |
| PAH-101 | Power Adapter Holder for GST120A24 (200 x 78 x 46 mm) |
| PAH-201 | Power Adapter Holder for GST220A24 (243 x 95 x 57 mm) |
| GST120A24-CIN | Adapter AC/DC 24V 5A 120W with 3pin Terminal Block Plug 5.0mm Pitch, with TUBES, Level VI |
| GST220A24-CIN | Adapter AC/DC 24V 9.2A 220W with 3pin Terminal Block Plug 5.0mm Pitch, with TUBES, Level VI |
| RC-E16E1-01 | Riser Card with 1x PCIex16, 1x PCIex1 Slots |
| RC-E8E8-01 | Riser Card with 2x PCIex8 Slots |
| RC-E16PI-01 | Riser Card with 1x PCIex16, 1x PCI Slots |
| RC-PIPI-01 | Riser Card with 2x PCI Slots |

© Cincoze Co., Ltd. All Rights Reserved. Specifications subject to change without notice.
All product names, logos, and brands are the property of their respective owners. All company, product and service names used in this document are for identification purposes only. The use of these names, logos, and brands does not imply endorsement.